Wheelie Bin Lifts

To suit 3.5 Tonne Vehicles & above

WB150 Series

Side lift for 3.5 to 12 tonne vehicles with open sided bodies. Lifts 120, 240 & 360 litre wheelie bins from ground to tip heights varying from 1.7 metres to 2.4 metres. Lift is operated by a hydraulic power pack via the vehicle battery.

Model	Lifting Capacity	Distance from ground to tip height	Installed weight
WB150-550	150kgs	1.7 Metres	135kgs
WB150-700	150kgs	2.0 Metres	145kgs
WB150-850	150kgs	2.3 Metres	155kgs
WB150-914	150kgs	2.4 Metres	160kgs

Technical Specification

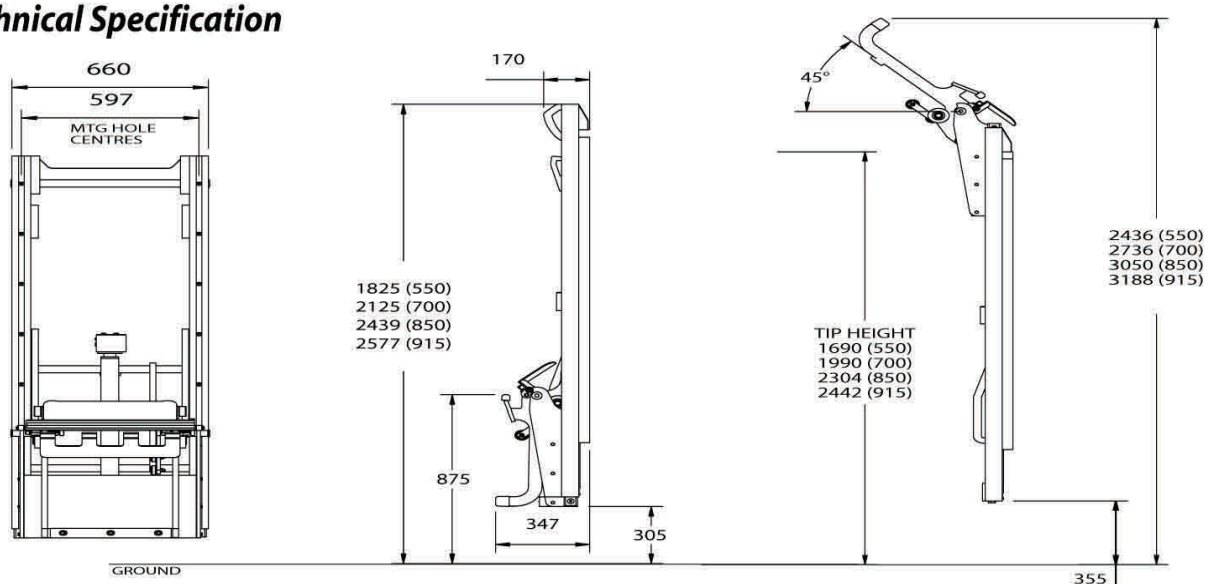

All dimensions are in mm

TSS - Technical Support Services
Unit 612 Northwest Business Park, Finglas, Dublin 11.

Tel: 01-8612800 - Fax: 01-8612005
Web: www.tssltd.ie - E-mail: sales@tssltd.ie